אמין הנדסת אש
www.aminfire.com טל: 2191*

Product Data Sheet

Advanced

Axis AX

שקע אנלוגי לטלפון כבאים

Addressable Firefighter Telephone Jack
AV-JACK

The AV-JACK can be mounted to a single-gang electrical back box and provides the capability of supporting a Portable Firefighter Telephone. The Advanced AV-PHONE is a compatible red Firefighter Telephone that has a mating male RCA ¼" plug.

When the AV-PHONE is plugged into the AV-JACK, a buzzer sounds at the Command Center indicating a request for service. Simultaneously, an associated LED flashes at the Command Center to indicate the location and identity of the incoming call. Once the Command Center operator presses the telephone connect button, the LED at the Command Center turns on steady and the LED at the AV-JACK turns on to indicate to the firefighter that the connection from the AV-JACK to the Command Center has been made.

The AV-JACK is compatible with the AV-TEL and AV-TEL-RISER6 telephone riser circuitry. The AV-TEL and AV-TEL-RISER6 circuitry create fully supervised telephone "party lines" that allow field mounted firefighter telephones to communicate with up to 5 other firefighter telephones on individual riser "party lines" as well as the Command Center telephone simultaneously. The "party line" can be configured as a Class B or Class A circuit.

Advanced has a variety of field mounted firefighter telephones to choose from. Customers may choose from either a firefighter's telephone, with AV-TEL-SUP module, that is mounted in an enclosure or an AV-JACK.

Any combination of up to 40 firefighters telephones and/or AV-JACKs are supported by the AV-TEL riser, while each riser of the AV-TEL-RISER6 supports 35 firefighters telephones and/or AV-JACKs.

All wiring from the AV-TEL or AV-TEL-RISER6 to all field mounted firefighter telephones and AV-JACKs are fully supervised for opens, shorts and ground faults.

Unique Features:

- Individually Addressable Telephone Jacks
- Phone Active LED Indicator
- Telephone Riser Supply Supervision
- Superivsed against Opens, Shorts and Grounds
- Class A or B Configuration

Features:

- Mounts in a Single-Gang Electrical Box
- Compatible with AV-TEL and AV-TEL-RISER6 Products
- Field Programmable for Buzzer and LED Status Indications
- Class A or B Wiring
- Five (5) Phone "Party Line" Communications per Telephone Riser
- Up to 40 AV-JACKs per AV-TEL Riser & up to 35 per AV-TEL-RISER6 Riser (210 max)
- Slide-in Custom Location Label

Listings and Approvals:

- ETL ANSI/UL 864 Listed: 3118002NYM-001B
- CSFM Approved: 7165-1713:0101
- NYCFD COA #6080

The EOL Resistor supplied with the Addressable I/O Module P/N 55000-820ADV is not required – an EOL Resistor is incorporated on the AV-JACK PCB.

A 6 conductor cable is supplied with the AV-JACK and is wired to the I/O Module as shown. Red and White wires are not polarity sensitive. Yellow and Black wires are not polarity sensitive but it is recommended to wire to the terminal positions as shown.

The 6 conductor cable supplied is 12” long with 24 AWG wires. If the wires need to be extended use cable suitable for the purpose and connect using a suitable terminal block or wire nuts. Maximum recommended distance is 30’.

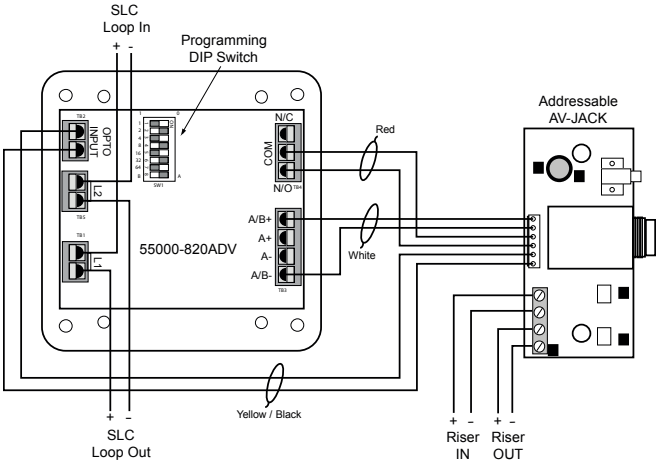

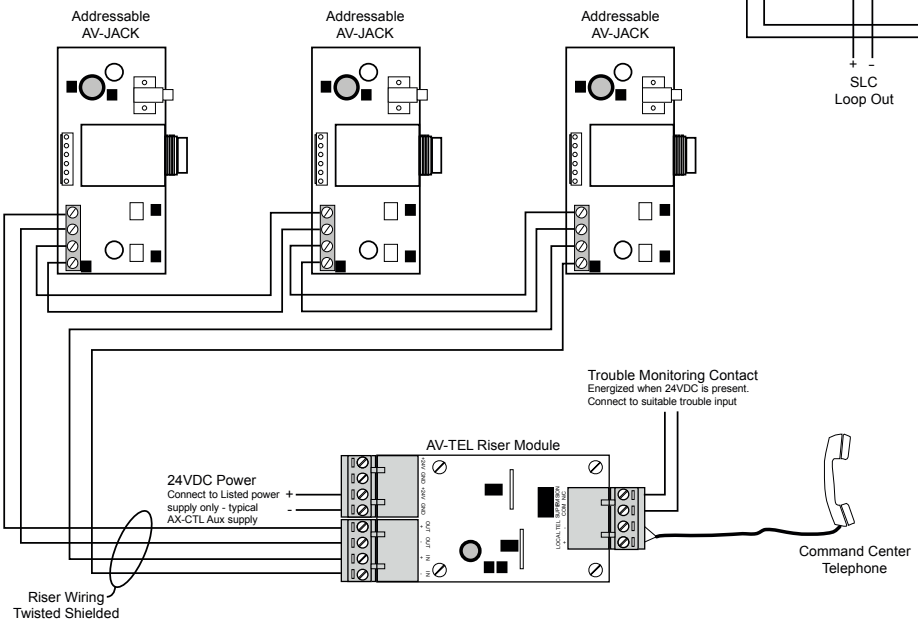

AV-JACK Addressable Firefighter Telephone Jack Specifications

Voltage	9 - 24 VDC
Current Draw	10 mA Quiescent / 30 mA Active
Wre Gauge	12 - 22 AWG, All Circuits Power Limited
Environment	Indoor Use Only
Electrical Backbox	Single-gang (3 1/2” deep) or double gang (with single-gang plaster ring) per NEC, Article 314

Ordering Information

AV-JACK	Addressable Firefighter Telephone Jack. Fully Supervised. Includes Phone Active LED that illuminates upon connection with Command Center Telephone.
AV-PHONE	Portable Firefighter Phone Handset (red) with RCA ¼” plug.
AV-TEL	Firefighter Phone w/Telephone Riser Module and Enclosure. Mounts to inner door of AX Command Centers.

אמין הנדסת אש

www.aminfire.com

טל: 2191*

Advanced

Advanced Fire Systems Inc
100 South Street, Hopkinton, MA 01748

Tel: (508) 435-9995
Fax: (508) 435-9990
Email: usa@advancedco.com
Web: www.advancedco.com